YUASA

YUASA NICKEL CADMIUM ALKALINE BATTERIES

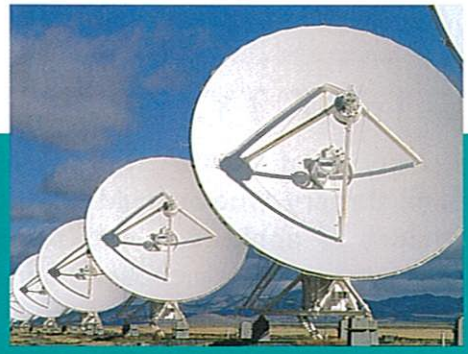

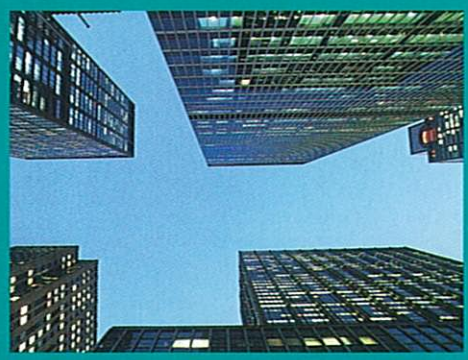

YUASA CORPORATION

TYPES QKC, QSC, QFD, QFG

FOR ALL MODES OF APPLICATIONS

YUASA Nickel-Cadmium Alkaline Batteries come off the production line backed by more than 50 years of research and manufacturing experience in the various fields of battery technology. Four different types, QKC, QSC, QFD and QFG, are available to meet a wide range of applications where dependable and constant DC power is needed.

BATTERY TYPE SELECTION

The selection of YUASA Nickel-Cadmium Alkaline Battery types should be based on the modes of application and service intended. When properly chosen they ensure maximal performance efficiency and lowest annual costs. The Table below is a general guide to help battery type selection.

Type	Selection Guidance	Suggested Applications
QKC (Pocket Plate)	For Normal Discharge load requirements over 150 min. DC power	* Emergency Lighting and Power * Telecommunications * Marine Service (except Engine Starting) * Railway Service (Train Lighting and Signals) * Traction
QSC (Pocket Plate)	For High Rate Discharge load requiremnts 30~200 min. DC Power	* Short-Period Emergency Lighting and Power * Switchgear and Supervisory Control * UPS (Uninterruptible Power Systems) * Engine Starting (Stationary/Marine/Train) * Instrumentations * All kinds of Auxiliary Power Supply * All kinds of Standby Power Supply
QFD (Sintered Plate)	For Very High Rate Discharge load requirements 15~150 min. DC Power	
QFG (Sintered Plate)	For Ultra High Rate Discharge load requirements less than 30 min. DC Power	

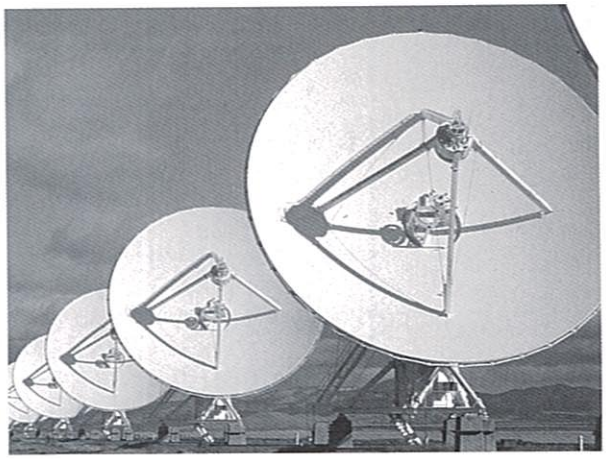

ORDERING / INQUIRY INSTRUCTIONS

1. Select the proper type (QKC, QSC, QFD or QFG type) of battery to meet your specific requirements by referring to the "BATTERY TYPE SELECTION" on the first page of this catalogue.

2. Determine the proper number of cells from the tables below.
3. Determine ampere-hour capacity for the required discharge rate.

4. In case there is difficulty in selecting the proper battery type, please provide the following details to enable us to recommend the battery type most suited for your requirements:—
   (a) Application (switchgear, inverter, emergency lighting or specify what other applications)
   (b) Nominal load voltage. Also max. voltage during charging and min. voltage when discharged, measured at battery terminals.
   (c) Discharge current and time
   (d) Ambient temperature

5. State whether electrolyte (KOH) and steel racks are needed. Our cells are normally shipped under dry and discharged condition, complete with separately packed electrolyte (dry or solution).

Typical Number of Cells per Battery

Nominal System Voltage	12	24	48	100	110	125	200	220	250
Number of Cells per Battery	9~11	20~22	35~44	73~90	80~99	91~113	146~180	160~198	182~225

Recommended Charging Voltages

Operating Conditions	Charging Voltage, V/cell		
	QKC Type	QSC Type	QFD and QFG Types
Froat Charging	1.44	1.42	1.35
Boost/Equalizing Charging	1.58	1.58	1.47
Activiating Charging before putting into service	30h at current of 0.1 × C Amps. 15h at current of 0.2 × C Amps.		

Note : When total charging voltage of battery exceeds the maximum permissible load voltage the output voltage of the associated battery charger should be reduced by means of voltage drop silicon diodes.

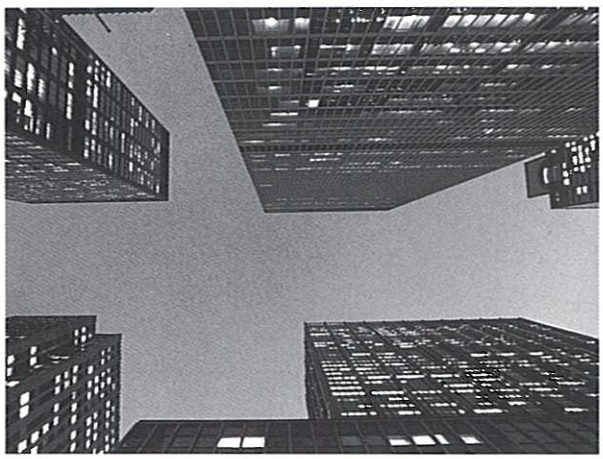

SPECIFIC FEATURES

LONG SERVICE LIFE

YUASA Ni-Cd Battery is your best choice to achieve long term economy with high reliability if the battery is properly sized, installed and maintained.

MECHANICAL DURABILITY

YUASA Ni-Cd Batteries, constructed to withstand severe mechanical shock and vibration, compared with other types of batteries, perform unfailingly to supply the designated power requirement.

INSENSIBILITY TO ERRORS

YUASA Ni-Cd Batteries withstand over/under-charging and failure of topping-up which are some of the common causes of damage to other types of batteries.

EXELLENT HIGH RATE DISCHARGE PERFORMANCE

YUASA Ni-Cd Batteries can maintain high terminal voltage under heavy current drain.YUASA QFG type battery,of sinterd plate construction, accepts even the most severe load conditions, especially under temperatures as low as −20°C/−4°F.

HIGH RECHARGE RATE ACCEPTANCE

YUASA Ni-Cd Batteries accept higher recharge rates than other types of batteries. YUASA QFD and QFG type of battery can be fully charged by charging to 120% of the discharged ampere-hours.

LOW SELF-DISCHARGE

YUASA Ni-Cd Batteries are almost chemically inert on open circuit and therefore self discharge rate is negligible.

SIMPLE MAINTENANCE

See-thru plastic containers and generous reserve of electrolyte make the maintenance of YUASA Ni-Cd Batteries exceedingly simple, thereby cutting maintenance costs to the very minimum. YUASA QFD and QFG type (sintered plate) battery eliminates periodic electrolyte renewal, a disadvantage often faced by other types of Ni-Cd batteries.

NO CORROSIVE FUMES

YUASA Ni-Cd Batteries do not generate corrosive fumes, therefore they can be installed together with other electrical equipments without any fear of damage through corrosive action.

Pocket Plate Cell

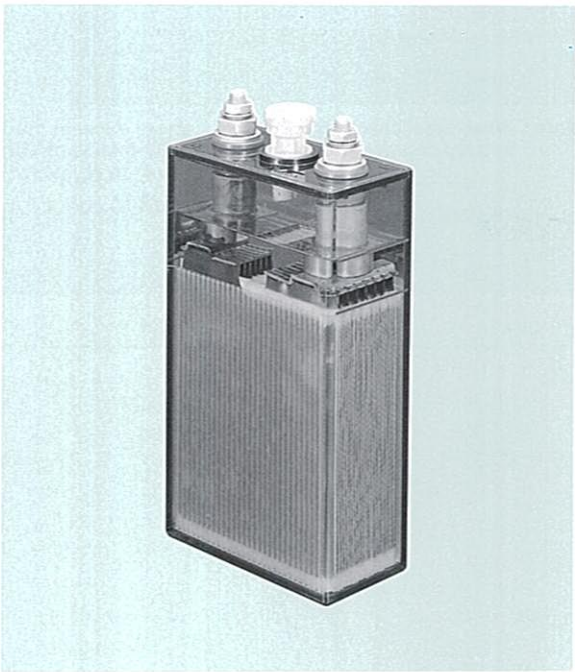

Sintered Plate Cell

CELL CONSTRUCTION

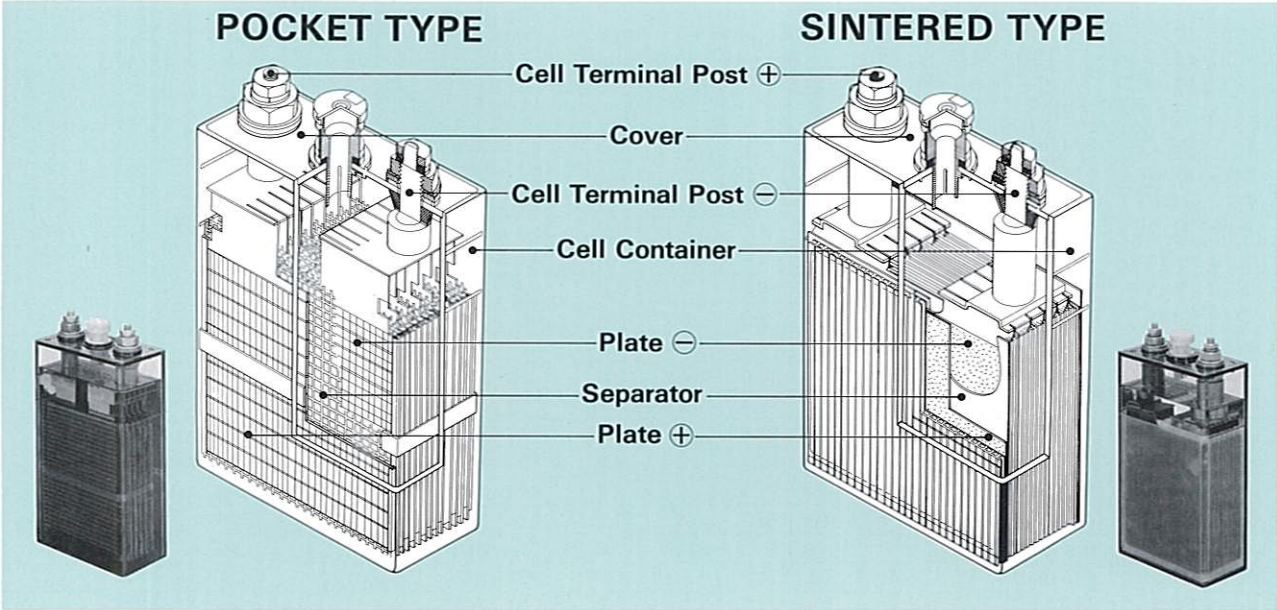

PLATE (POCKET TYPE)

Positive: Active material, mainly nickel hydrate, is retained in finely perforated steel pockets. These pockets are locked together and trimmed to form plates of the desired height and a steel U-frame is pressed around the edges to form a plate of enhanced mechanical strength, preventing any loss of active material even under most severe service conditions.

Negative: Active material, mainly cadmium obtained by simultaneous electrolysis, is retained in a pocket construction similar to that for positive plates.

PLATE (SINTERED TYPE)

Positive and negative sintered plates consist of highly porous nickel plaques manufactured by sintering finely powdered nickel on to nickel clad steel sheets. The highly porous structure thus formed is then impregnated with active material, nickel hydrate for the positive and cadmium hydrate for the negative.

SEPARATORS

Separators are made of alkali-resistant synthetic material for providing electrical separation between positive and negative plates. Separators provide additional protection to maintain a safe space between plates of opposite polarity.

CONTAINER

Moulded plastic container guarantees strong mechanical strength and clear see-thru features. Plastic covers are sealed on top of container. Max. and min. electrolyte level lines are marked on the sides of container.

CELL TERMINAL POSTS

All cells have terminal posts of nickel-plated steel or copper with ISO metric thread which are locked to container cover by steel seat nuts to avoid seepage of electrolyte. Larger cells have two or more terminal posts of same polarity.
Posts of similar polarities should be connected together.

ELECTROLYTE

A solution of pottasium hydroxide with small amounts of lithium hydroxide. Both are of very high purity. Standard specific gravity is 1.20 at 20°C/68°F. For batteries used in cold areas, a specific gravety of 1.24 at 20°C/68°F is applicable.

Note

All specifications in this catalogue are subject to change without prior notice.

TYPE QKC (POCKET PLATE)

CAPACITIES, DIMENSIONS AND WEIGHTS

YUASA TYPE	JIS TYPE	Rated Capacity (Ah) 5HR	Weight per Cell W/Electolyte (kg)	Approx. Volume of Electrolyte (litre)	Overall Dimensions(mm)				
					Height	Width	Length		
							Cell	Taped cell group	
								5 Cells	6 Cells
QKC 30D	AM 30P	30	2.8	0.9	276	143	52	260	312
QKC 40D	AM 40P	40	2.9	0.8	276	143	52	260	312
QKC 50D	AM 50P	50	3.0	0.7	276	143	52	260	312
QKC 60D	AM 60P	60	4.1	1.2	276	143	75.5	378	453
QKC 80D	AM 80P	80	4.5	1.1	276	143	75.5	378	453
QKC 100D	AM 100P	100	6.0	1.5	276	145	100	–	–
QKC 120D	AM 120P	120	9.0	3.4	365	170	120	–	–
QKC 150D	AM 150P	150	9.5	3.2	365	170	120	–	–
QKC 200D	AM 200P	200	10.0	2.8	365	170	120	–	–
QKC 250D	AM 250P	250	15.4	5.4	365	*170	195	–	–
QKC 300D	AM 300P	300	17.4	5.0	365	*170	195	–	–
QKC 350D	AM 350P	350	18.4	4.6	365	*170	195	–	–
QKC 400D	AM 400P	400	25.3	8.2	365	*170	285	–	–
QKC 450D	AM 450P	450	26.3	7.8	365	*170	285	–	–
QKC 500D	AM 500P	500	27.8	7.0	365	*170	285	–	–
QKC 600D	AM 600P	600	36.0	10.3	365	*170	390	–	–
QKC 700D	AM 700P	700	37.5	9.5	365	*170	390	–	–
QKC 800D	AM 800P	800	39.0	8.7	365	*170	390	–	–
QKC 900D	AM 900P	900	48.0	13.0	365	*170	515	–	–
QKC 1000D	AM 1000P	1000	50.0	12.0	365	*170	515	–	–

(Rated Capacity is of 5 hours discharge rate to the end voltage of 1.00 Volt/cell.)

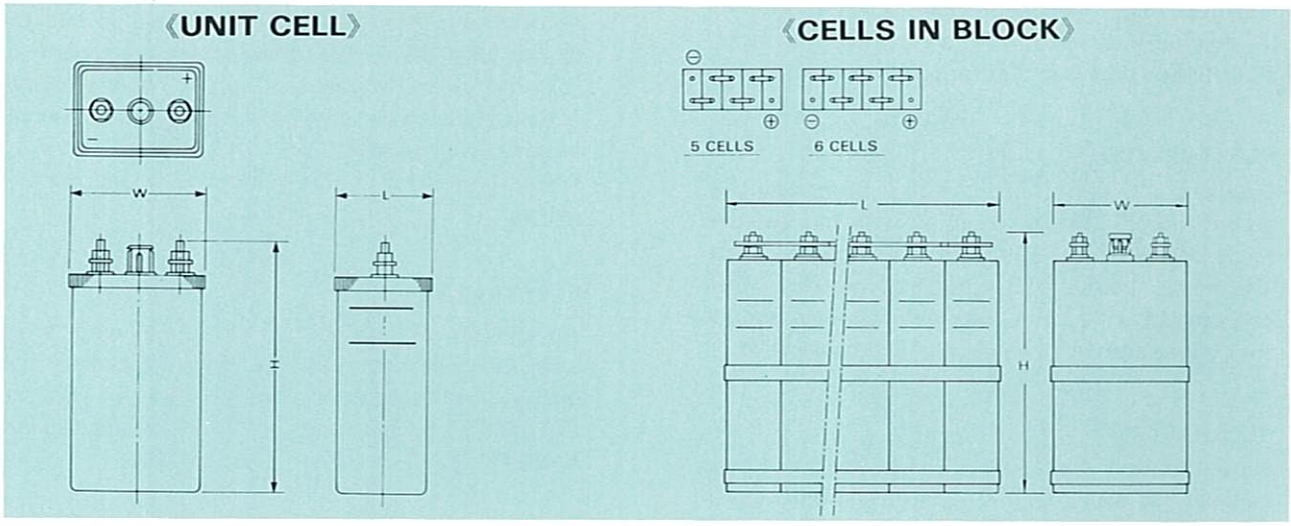

Remarks:

1. Cell type marked * indicate the electrolyte level on width side.
2. Required number of unit cells of smaller capacity are bundled and sealed by tape into a cell group. When cells are grouped by steel tray upon your request, the tray will be coated with alkaline-resistant paint.
3. The external dimensions of cell group contained in steel tray will be large by about 34mm in length, about 6mm in width and about 1mm in height respectively. (Inquiries for detail are invited)

TYPE QSC (POCKET PLATE)

CAPACITIES, DIMENSIONS AND WEIGHTS

YUASA TYPE	JIS TYPE	Rated Capacity (Ah) 5HR	Weight per Cell W/Electolyte (kg)	Approx. Volume of Electrolyte (litre)	Overall Dimensions(mm)				
					Height	Width	Length		
							Cell	Taped cell group	
								5 Cells	6 Cells
QSC 20C	AMH 20P	20	2.7	0.83	276	143	52	260	312
QSC 30C	AMH 30P	30	2.9	0.76	276	143	52	260	312
QSC 40C	AMH 40P	40	3.0	0.72	276	143	52	260	312
QSC 50C	AMH 50P	50	4.2	1.3	276	143	75.5	378	453
QSC 60C	AMH 60P	60	4.5	1.15	276	143	75.5	378	453
QSC 80C	AMH 80P	80	5.7	1.6	276	145	100	–	–
QSC 100C	AMH 100P	100	10.0	3.6	365	170	120	–	–
QSC 120C	AMH 120P	120	10.3	3.5	365	170	120	–	–
QSC 150C	AMH 150P	150	10.7	3.3	365	170	120	–	–
QSC 200C	AMH 200P	200	16.5	6.1	360	*170	195	–	–
QSC 250C	AMH 250P	250	17.4	5.8	360	*170	195	–	–
QSC 300C	AMH 300P	300	18.1	5.3	360	*170	195	–	–
QSC 350C	AMH 350P	350	25.2	9.1	365	*170	285	–	–
QSC 400C	AMH 400P	400	26.4	8.6	365	*170	285	–	–
QSC 450C	AMH 450P	450	27.2	8.2	365	*170	285	–	–
QSC 500C	AMH 500P	500	35.9	12.0	365	*170	390	–	–
QSC 600C	AMH 600P	600	37.2	11.3	365	*170	390	–	–
QSC 700C	AMH 700P	700	46.0	15.8	365	*170	515	–	–
QSC 800C	AMH 800P	800	47.7	15.0	365	*170	515	–	–
QSC 900C	AMH 900P	900	49.5	14.2	365	*170	515	–	–
QSC 1000C	AMH 1000P	1000	50.0	14.0	365	*170	515	–	–

(Rated Capacity is of 5 hours discharge rate to the end voltage of 1.00 Volt/cell.)

TYPE QFD (SINTERED PLATE)

CAPACITIES, DIMENSIONS AND WEIGHT

YUASA TYPE	JIS TYPE	Rated Capacity (Ah) 5HR	Weight per Cell W/Electolyte (kg)	Approx. Volume of Electrolyte (litre)	Overall Dimensions(mm)				
					Height	Width	Length		
							Cell	Taped cell group	
								5 Cells	6 Cells
QFD 20A	AH 20S	20	2.8	0.91	276	143	52	280	337
QFD 30A	AH 30S	30	3.0	0.85	276	143	52	280	337
QFD 40A	AH 40S	40	3.2	0.83	276	143	52	280	337
QFD 50A	AH 50S	50	3.4	0.77	276	143	52	280	337
QFD 60A	AH 60S	60	3.6	0.71	276	143	52	280	337
QFD 80B	AH 80S	80	4.0	0.65	276	143	52	280	337
QFD 100A	AH 100S	100	5.4	1.1	276	143	75.5	398	478
QFD 120B	AH 120S	120	5.9	1.0	276	143	75.5	398	478
QFD 150A	AH 150S	150	7.0	1.4	276	145	100	–	–
QFD 200A	AH 200S	200	12.4	3.0	360	170	120	–	–
QFD 250A	AH 250S	250	13.2	2.8	360	170	120	–	–
QFD 300A	AH 300S	300	18.6	5.5	360	*170	195	–	–
QFD 350A	AH 350S	350	19.4	5.3	360	*170	195	–	–
QFD 400A	AH 400S	400	20.2	5.0	360	*170	195	–	–
QFD 450B	AH 450S	450	20.9	4.8	360	*170	195	–	–
QFD 500A	AH 500S	500	28.8	8.1	365	*170	285	–	–
QFD 600A	AH 600S	600	37.9	11.6	365	*170	390	–	–
QFD 700A	AH 700S	700	39.5	11.1	365	*170	390	–	–
QFD 800A	AH 800S	800	41.2	10.5	365	*170	390	–	–
QFD 900B	AH 900S	900	42.8	10.3	365	*170	390	–	–
QFD 1000A	AH 1000S	1000	55.0	14.4	365	*170	515	–	–
QFD 1200A	AH 1200S	1200	59.5	13.2	365	*170	515	–	–

TYPE QFG (SINTERED PLATE)

CAPACITIES, DIMENSIONS AND WEIGHT

YUASA TYPE	JIS TYPE	Rated Capacity (AHH) 1HR	Weight per Cell W/Electolyte (kg)	Approx. Volume of Electrolyte (litre)	Overall Dimensions(mm)				
					Height	Width	Length		
							Cell	Taped cell group	
								5 Cells	6 Cells
QFG 20	AHH 20S	20	2.9	0.84	276	143	52	280	337
QFG 30	AHH 30S	30	3.2	0.81	276	143	52	280	337
QFG 40	AHH 40S	40	3.3	0.77	276	143	52	280	337
QFG 50	AHH 50S	50	3.5	0.74	276	143	52	280	337
QFG 60	AHH 60S	60	3.7	0.70	276	143	52	280	337
QFG 80	AHH 80S	80	5.0	1.1	276	143	75.5	398	478
QFG 100	AHH 100S	100	5.5	1.0	276	143	75.5	398	478
QFG 120	AHH 120S	120	12.1	3.2	365	170	120	–	–
QFG 150	AHH 150S	150	12.5	3.1	365	170	120	–	–
QFG 200	AHH 200S	200	13.3	2.9	365	170	120	–	–
QFG 250	AHH 250S	250	19.2	5.5	365	*170	195	–	–
QFG 300	AHH 300S	300	20.1	5.3	365	*170	195	–	–
QFG 350	AHH 350S	350	21.0	5.1	365	*170	195	–	–
QFG 400A	AHH 400S	400	30.0	7.7	365	*170	285	–	–
QFG 450A	AHH 450S	450	31.0	7.5	365	*170	285	–	–
QFG 500A	AHH 500S	500	32.0	7.3	365	*170	285	–	–
QFG 600A	AHH 600S	600	41.7	10.3	365	*170	390	–	–
QFG 700A	AHH 700S	700	43.4	9.9	365	*170	390	–	–
QFG 800A	AHH 800S	800	57.6	13.7	365	*170	515	–	–
QFG 900A	AHH 900S	900	59.4	13.3	365	*170	515	–	–
QFG 1000A	AHH 1000S	1000	64.8	12.0	365	*170	515	–	–

(Rated Capacity is of 1 hour discharge rate to the end voltage of 1.00 Volt/cell.)

CELL PERFORMANCE DATA

AVAILABLE AMPERES TO END VOLTAGE OF 1.00 VOLT PER CELL AT 25℃ (77°F) FULLY CHARGED

Type:QKC

CELL TYPE	Available Amperes on Discharge to 1.00V per Cell					
	10Hr.	8Hr.	5Hr.	3Hr.	2Hr.	1Hr.
QKC 30D	3.15	3.87	6	9.37	12.7	18.7
QKC 40D	4.21	5.16	8	12.5	17	25
QKC 50D	5.26	6.45	10	15.6	21.2	31.2
QKC 60D	6.31	7.74	12	18.7	25.5	37.5
QKC 80D	8.42	10.3	16	25	34	50
QKC 100D	10.5	12.9	20	31.2	42.5	62.5
QKC 120D	12.6	15.4	24	37.5	51	75
QKC 150D	15.7	19.3	30	46.8	63.8	93.7
QKC 200D	21	25.8	40	62.5	85.1	125
QKC 250D	26.3	32.2	50	78.1	106	156
QKC 300D	31.5	38.7	60	93.7	127	187
QKC 350D	36.8	45.1	70	109	148	218
QKC 400D	42.1	51.6	80	125	170	250
QKC 450D	47.3	58.0	90	140	191	281
QKC 500D	52.6	64.5	100	156	212	312
QKC 600D	63.1	77.4	120	187	255	375
QKC 700D	73.6	90.3	140	218	297	437
QKC 800D	84.2	103	160	250	340	500
QKC 900D	94.7	116	180	281	382	562
QKC 1000D	105	129	200	312	425	625

Type:QSC

CELL TYPE	Available Amperes on Discharge to 1.00V per Cell								
	5Hr.	2Hr.	1Hr.	0.5Hr.	15Min.	5Min.	1Min.	5Sec.	1Sec.
QSC 20C	4.08	9.75	16.6	24	30.3	37	44.4	57.1	66.6
QSC 30C	6.12	14.6	25	36.1	45.4	55.5	66.6	85.7	100
QSC 40C	8.16	19.5	33.3	48.1	60.6	74	88.8	114	133
QSC 50C	10.2	24.3	41.6	60.2	75.7	92.5	111	142	166
QSC 60C	12.2	29.2	50	72.2	90.9	111	133	171	200
QSC 80C	16.3	39	66.6	96.3	121	148	177	228	266
QSC 100C	20.4	48.7	83.3	120	151	185	222	285	333
QSC 120C	24.4	58.5	100	144	181	222	266	342	400
QSC 150C	30.6	73.1	125	180	227	277	333	428	500
QSC 200C	40.8	97.5	166	240	303	370	444	571	666
QSC 250C	51	121	208	301	378	462	555	714	833
QSC 300C	61.2	146	250	361	454	555	666	857	1000
QSC 350C	71.4	170	291	421	530	648	777	1000	1166
QSC 400C	81.6	195	333	481	606	740	888	1142	1333
QSC 450C	91.8	219	375	542	681	833	1000	1285	1500
QSC 500C	102	243	416	602	757	925	1111	1428	1666
QSC 600C	122	292	500	722	909	1111	1333	1714	2000
QSC 700C	142	341	583	843	1060	1296	1555	2000	2333
QSC 800C	163	390	666	963	1212	1481	1777	2285	2666
QSC 900C	183	439	750	750	1363	1666	2000	2571	3000
QSC 1000C	204	486	832	1204	1514	1850	2222	2856	3332

Type:QFD

CELL TYPE	Available Amperes on Discharge to 1.00V per Cell							
	5Hr.	1Hr.	0.5Hr.	5Min.	1Min.	0.5Min.	5Sec.	1Sec.
QFD 20A	4.1	17.8	32.2	66.6	95.2	105	125	142
QFD 30A	6.2	26.7	48.3	100	142	157	187	214
QFD 40A	8.3	35.7	64.5	133	190	210	250	285
QFD 50A	10.4	44.6	80.6	166	238	263	312	357
QFD 60A	12.5	53.5	96.7	200	285	315	375	428
QFD 80B	16.6	71.4	129	266	380	421	500	571
QFD 100A	20.8	89.2	161	333	476	526	625	714
QFD 120B	25	107	193	400	571	631	750	857
QFD 150A	31.2	133	241	500	714	789	937	1071
QFD 200A	41.6	178	322	666	952	1052	1250	1428
QFD 250A	52	223	403	806	1086	1190	1388	1562
QFD 300A	62.5	267	483	967	1224	1304	1500	1666
QFD 350A	72.9	312	564	1129	1428	1521	1750	1944
QFD 400A	83.3	357	645	1290	1632	1739	2000	2222
QFD 450B	93.7	401	725	1451	1836	1956	2250	2500
QFD 500A	104	446	806	1612	2040	2173	2500	2777
QFD 600A	125	535	967	1935	2448	2608	3000	3333
QFD 700A	145	625	1129	2258	2857	3043	3500	3888
QFD 800A	166	714	1290	2580	3265	3478	4000	4444
QFD 900B	187	803	1451	2903	3673	3913	4500	5000
QFD 1000A	208	892	1612	3225	4081	4347	5000	5555
QFD 1200A	250	1071	1935	3870	4897	5714	6000	6666

Type : QFG

CELL TYPE	Available Amperes on Discharge to 1.00V per Cell							
	1 Hr.	0.5 Hr.	15 Min.	5 Min.	1 Min.	0.5Min.	5 Sec.	1 Sec.
QFG 20	20	37.7	66.6	114	156	168	181	190
QFG 30	30	56.6	100	171	234	252	272	285
QFG 40	40	75.4	113	228	312	336	363	380
QFG 50	50	94.3	166	285	390	420	454	476
QFG 60	60	113	200	342	468	504	545	571
QFG 80	80	150	266	457	625	672	727	761
QFG 100	100	188	333	571	781	840	909	952
QFG 120	120	226	400	685	937	1008	1090	1142
QFG 150	150	283	500	857	1171	1260	1363	1428
QFG 200	200	377	666	1142	1562	1680	1818	1904
QFG 250	250	471	833	1428	1953	2100	2272	2380
QFG 300	300	566	1000	1714	2343	2521	2727	2857
QFG 350	350	660	1166	2000	2734	2941	3181	3333
QFG 400A	400	754	1333	2285	3125	3361	3636	3809
QFG 450A	450	849	1500	2571	3515	3781	4090	4285
QFG 500A	500	943	1666	2857	3906	4201	4545	4761
QFG 600A	600	1132	2000	3428	4687	5042	5454	5714
QFG 700A	700	1320	2333	4000	5468	5882	6363	6666
QFG 800A	800	1509	2666	4571	6250	6722	7272	7619
QFG 900A	900	1698	3000	5142	7031	7563	8181	8571
QFG 1000A	1000	1886	3333	5714	7812	8403	9090	9523

CELL PERFORMANCE DATA

AVAILABLE AMPERES TO END VOLTAGE OF 1.06 VOLT PER CELL AT 25℃ (77°F) FULLY CHARGED

Type:QKC

CELL TYPE	Available Amperes on Discharge to 1.00V per Cell					
	10Hr.	8Hr.	5Hr.	3Hr.	2Hr.	1Hr.
QKC 30D	3.06	3.75	5.76	8.1	10.5	15.3
QKC 40D	4.08	5	7.69	10.8	14	20.5
QKC 50D	5.1	6.25	9.61	13.5	17.5	25.6
QKC 60D	6.12	7.5	11.5	16.2	21	30.7
QKC 80D	8.16	10	15.3	21.6	28	41
QKC 100D	10.2	12.5	19.2	27	35	51.2
QKC 120D	12.2	15	23	32.4	42.1	61.5
QKC 150D	15.3	18.7	28.8	40.5	52.6	76.9
QKC 200D	20.4	25	38.4	54	70.1	102
QKC 250D	25.5	31.2	48	67.5	87.7	128
QKC 300D	30.6	37.5	57.6	81	105	153
QKC 350D	35.7	43.7	67.3	94.5	122	179
QKC 400D	40.8	50	76.9	108	140	205
QKC 450D	45.9	56.2	86.5	121	157	230
QKC 500D	51	62.5	96.1	135	175	256
QKC 600D	61.2	75	115	162	210	307
QKC 700D	71.4	87.5	134	189	245	358
QKC 800D	81.6	100	153	216	280	410
QKC 900D	91.8	112	173	243	315	461
QKC 1000D	102	125	192	270	350	512

Type:QSC

CELL TYPE	Available Amperes on Discharge to 1.00V per Cell							
	5Hr.	2Hr.	1Hr.	0.5Hr.	5Min.	1Min.	5Sec.	1Sec.
QSC 20C	9	8.51	13.7	20	31.2	37	46.5	52.6
QSC 30C	6	12.7	20.6	30	46.8	55.5	69.7	78.9
QSC 40C	8	17	27.5	40	62.5	74	93	105
QSC 50C	10	21.2	34.4	50	78.1	92.5	116	131
QSC 60C	12	25.5	41.3	60	93.7	111	139	157
QSC 80C	16	34	55.1	80	125	148	186	210
QSC 100C	20	42.5	68.9	100	156	185	232	263
QSC 120C	24	51	82.7	120	187	222	279	315
QSC 150C	30	63.8	103	150	234	277	348	394
QSC 200C	40	85.1	137	200	312	370	465	526
QSC 250C	50	106	172	250	390	462	581	657
QSC 300C	60	127	206	300	468	555	697	789
QSC 350C	70	148	241	350	546	648	813	921
QSC 400C	80	170	275	400	625	740	930	1052
QSC 450C	90	191	310	450	703	833	1046	1184
QSC 500C	100	212	344	500	781	925	1162	1315
QSC 600C	120	255	413	600	937	1111	1395	1578
QSC 700C	140	297	482	700	1093	1296	1627	1842
QSC 800C	160	340	551	800	1250	1481	1860	2105
QSC 900C	180	382	620	900	1406	1666	2093	2368
QSC 1000C	200	424	688	1000	1562	1850	2324	2630

Type:QFD

CELL TYPE	Available Amperes on Discharge to 1.06V per Cell							
	5Hr.	1Hr.	0.5Hr.	5Min.	1Min.	0.5Min.	5Sec.	1Sec.
QFD 20A	4.08	15.3	27.3	60.6	78.4	85.1	97.5	108
QFD 30A	6.12	23	41	90.9	117	127	146	162
QFD 40A	8.16	30.7	54.7	121	156	170	195	216
QFD 50A	10.2	38.4	68.4	151	196	212	243	270
QFD 60A	12.2	46.1	82.1	181	235	255	292	324
QFD 80B	16.3	61.5	109	242	313	340	390	432
QFD 100A	20.4	76.9	136	303	392	425	487	540
QFD 120B	24.4	92.3	164	363	470	510	585	648
QFD 150A	30.6	115	205	454	588	638	731	810
QFD 200A	40.8	153	273	606	784	851	975	1081
QFD 250A	51	192	342	714	892	961	1136	1250
QFD 300A	61.2	230	410	821	1000	1071	1276	1428
QFD 350A	71.4	269	479	958	1166	1250	1489	1666
QFD 400A	81.6	307	547	1095	1333	1428	1702	1904
QFD 450B	91.8	346	616	1232	1500	1607	1914	2142
QFD 500A	102	384	684	1369	1666	1785	2127	2380
QFD 600A	122	461	821	1643	2000	2142	2553	2857
QFD 700A	142	538	958	1917	2333	2500	2978	3333
QFD 800A	163	615	1095	2191	2666	2857	3404	3809
QFD 900B	183	692	1232	2465	3000	3214	3829	4285
QFD 1000A	204	769	1369	2739	3333	3571	4255	4761
QFD 1200A	244	923	1643	3287	4000	4285	5106	5714

Type:QFG

CELL TYPE	Available Amperes on Discharge to 1.06V per Cell						
	1 Hr.	0.5 Hr.	5 Min.	1 Min.	0.5 Min.	5 Sec.	1 Sec.
QFG 20	19.2	35	93	125	133	142	148
QFG 30	28.8	52.6	139	187	200	214	222
QFG 40	38.4	70.1	186	250	266	285	296
QFG 50	48	87.7	232	312	333	357	370
QFG 60	57.6	105	279	375	400	428	444
QFG 80	76.9	140	372	500	533	571	592
QFG 100	96.1	175	465	625	666	714	740
QFG 120	115	210	558	750	800	857	888
QFG 150	144	263	697	937	1000	1071	1111
QFG 200	192	350	930	1250	1333	1428	1481
QFG 250	240	438	1162	1562	1666	1785	1851
QFG 300	288	526	1395	1875	2000	2142	2222
QFG 350	336	614	1627	2187	2333	2500	2592
QFG 400A	384	701	1860	2500	2666	2857	2962
QFG 450A	432	789	2093	2812	3000	3214	3333
QFG 500A	480	877	2325	3125	3333	3571	3703
QFG 600A	576	1052	2790	3750	4000	4285	4444
QFG 700A	673	1228	3255	4375	4666	5000	5185
QFG 800A	769	1403	3720	5000	5333	5714	5925
QFG 900A	865	1578	4186	5625	6000	6428	6666
QFG 1000A	961	1754	4651	6250	6666	7142	7407

DISCHARGE PERFORMANCE

TYPICAL DISCHARGE CHARACTERISTICS AT 25℃ (77°F)

Type: QKC

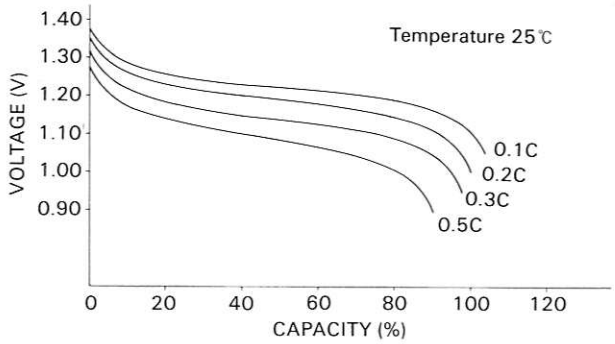

* For all cell types the rated capacity "C" is defined as available ampere hours (Ah) at 5 hours discharge (1 hour discharge for QFG type) to the end voltage of each type:

Type: QSC

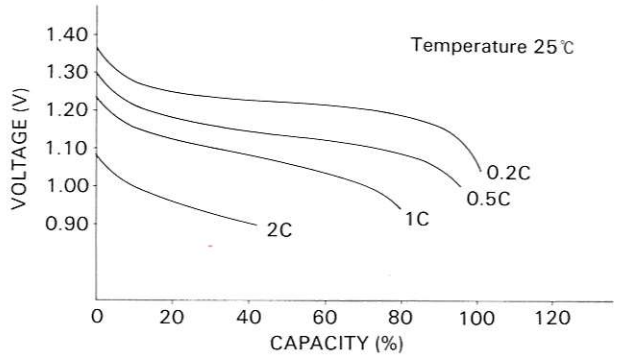

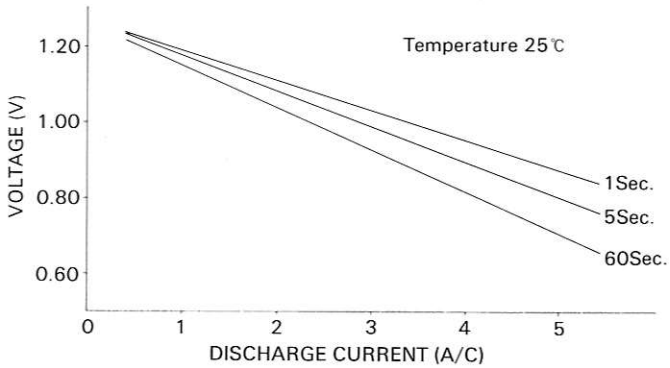

Type:QFD

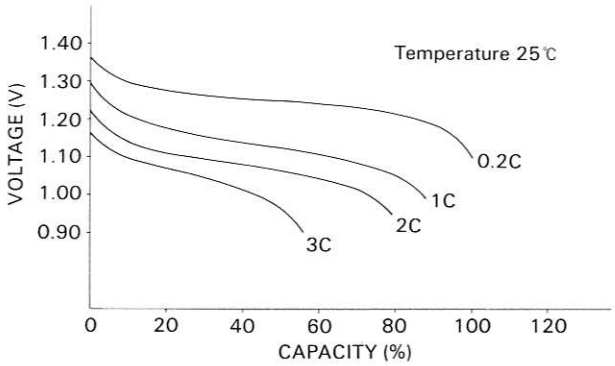

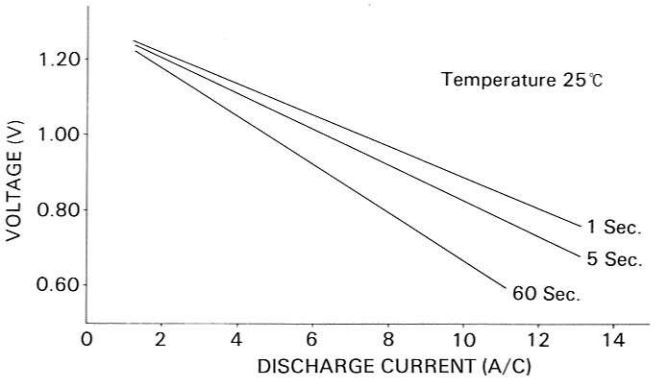

Type: QFG

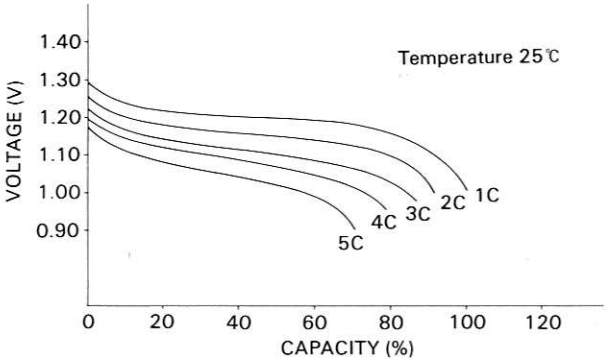

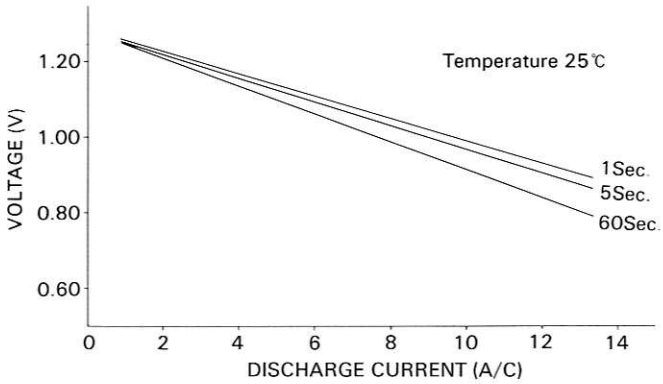

STANDARD MAINTENANCE TOOLS

Item	Description	Q'ty	Item	Description	Q'ty
Syringe-Type Hydrometer	Syringe Float Sp.gr.range 1.10-1.30	1	Plastic Syringe	Capacity 180cc	1
			Funnel	Plastic	1
Rod Thermometer	Range −20°C～100°C (−4～212°F) Red alcohol	1	Socket Type Spanner	For terminal screwing	1
			Tool Box	Plastic	1
Plastic Jug (No.3)	Capacity 2 litres	1	DC Voltmeter (Option)	Multimeter (Voltage range 0-2V)	1

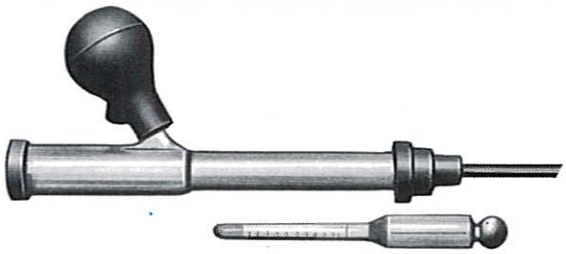
Syringe-Type Hydrometer

Jug

Funnel

DC Voltmeter (Option)

Rod Thermometer

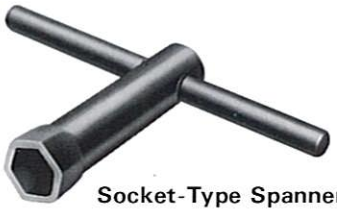
Socket-Type Spanner

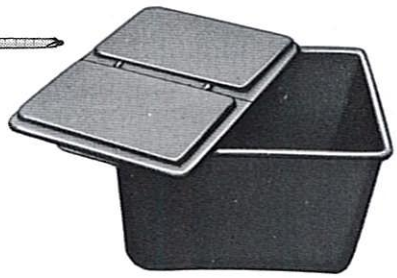
Tool Box

Syringe

BATTERY STEEL RACK (EARTHQUAKE-PROOF)

1.Single Tier Construction Rack

	Cell Type	Rack Construction	Overall Dimensions Approx.(mm)							
			Height	Width	Length					
					10 cells/Row	11 cells/Row	12 cells/Row	13 cells/Row	14 cells/Row	15 cells/Row
For QKC, QSC Pocket Type	QKC30D~50D QSC20C~40C	1 Tier 2 Row 1 Tier 2 Step	426 508	520	630 (A-0) (B-0)	682 (A-0) (B-0)	734 (A-0) (B-0)	786 (A-0) (B-0)	838 (A-0) (B-0)	890 (A-0) (B-0)
	QKC60D~80D QSC50C~60C	1 Tier 2 Row 1 Tier 2 Step	426 508	520	865 (A-0) (B-0)	941 (A-0) (B-0)	1016 (A-0) (B-0)	1092 (A-0) (B-0)	1167 (A-0) (B-0)	1243 (A-0) (B-0)
	QKC100D QSC80C	1 Tier 2 Row 1 Tier 2 Step	426 508	524	1155 (A-0) (B-0)	1260 (A-0) (B-0)	1365 (A-0) (B-0)	1470 (A-0) (B-0)	1575 (A-0) (B-0)	1680 (A-0) (B-0)
	QKC120D~200D QSC100C~150C	1 Tier 2 Row 1 Tier 2 Step	515 638	570	1355 (A-1) (B-1)	1480 (A-1) (B-1)	1605 (A-1) (B-1)	1730 (A-1) (B-1)	1855 (A-1) (B-1)	1980 (A-1) (B-1)
	QKC250D~350D QSC200C~300C	1 Tier 2 Row 1 Tier 2 Step	510 633	620	1855 (A-1) (B-1)	2030 (A-1) (B-1)	2205 (A-1) (B-1)	2380 (A-1) (B-1)	2555 (A-1) (B-1)	2730 (A-1) (B-1)
	QKC400D~500D QSC350C~450C	1 Tier 2 Row 1 Tier 2 Step	515 638	800	1855 (A-1) (B-1)	2030 (A-1) (B-1)	2205 (A-1) (B-1)	2380 (A-1) (B-1)	2555 (A-1) (B-1)	2730 (A-1) (B-1)
	QKC600D~800D QSC500C~600C	1 Tier 2 Row 1 Tier 2 Step	515 638	1010	1855 (A-1) (B-1)	2030 (A-1) (B-1)	2205 (A-2) (B-2)	2380 (A-2) (B-2)	2555 (A-2) (B-2)	2730 (A-2) (B-2)
	QKC900D~1000D QSC700C~900C	1 Tier 2 Row	515 638	1260	1855(A-1)	2030(A-1)	2205(A-2)	2380(A-2)	2555(A-2)	2730(A-2)
For QFD, QFG, Sintered Plate Type	QFD20A~80B QFG20~60	1 Tier 2 Row 1 Tier 2 Step	426 508	520	675 (A-0) (B-0)	732 (A-0) (B-0)	789 (A-0) (B-0)	846 (A-0) (B-0)	903 (A-0) (B-0)	960 (A-0) (B-0)
	QFD100A~120B QFG80~100	1 Tier 2 Row 1 Tier 2 Step	426 508	520	910 (A-0) (B-0)	991 (A-0) (B-0)	1071 (A-0) (B-0)	1152 (A-0) (B-0)	1232 (A-0) (B-0)	1313 (A-0) (B-0)
	QFD150A	1 Tier 2 Row 1 Tier 2 Step	426 508	524	1155 (A-0) (B-0)	1260 (A-0) (B-0)	1365 (A-0) (B-0)	1470 (A-0) (B-0)	1575 (A-0) (B-0)	1680 (A-0) (B-0)
	QFD200A~250A QFG120~200	1 Tier 2 Row 1 Tier 2 Step	510 633	570	1355 (A-1) (B-1)	1480 (A-1) (B-1)	1605 (A-1) (B-1)	1730 (A-1) (B-1)	1855 (A-1) (B-1)	1980 (A-1) (B-1)
	QFD300A~450B QFG250~350	1 Tier 2 Row 1 Tier 2 Step	510 633	620	1855 (A-1) (B-1)	2030 (A-1) (B-1)	2205 (A-1) (B-1)	2380 (A-1) (B-1)	2555 (A-1) (B-1)	2730 (A-1) (B-1)
	QFD500A QFG400~500	1 Tier 2 Row 1 Tier 2 Step	515 638	800	1855 (A-1) (B-1)	2030 (A-1) (B-1)	2205 (A-1) (B-1)	2380 (A-1) (B-1)	2555 (A-1) (B-1)	2730 (A-1) (B-1)
	QFD600A~900B QFG600~700	1 Tier 2 Row 1 Tier 2 Step	515 638	1010	1855 (A-1) (B-1)	2030 (A-1) (B-1)	2205 (A-2) (B-2)	2380 (A-2) (B-2)	2555 (A-2) (B-2)	2730 (A-2) (B-2)
	QFD1000A~1200A QFG800~1000	1 Tier 2 Row	515	1260	1855(A-1)	2030(A-1)	2205(A-2)	2380(A-2)	2555(A-2)	2730(A-2)

Note: 1. Standard Steel Rack, delivered disassembled. Specil design available on request.
2. ( ) show style of rack in figure. Dwg No.

(1 Tier 2 Row)

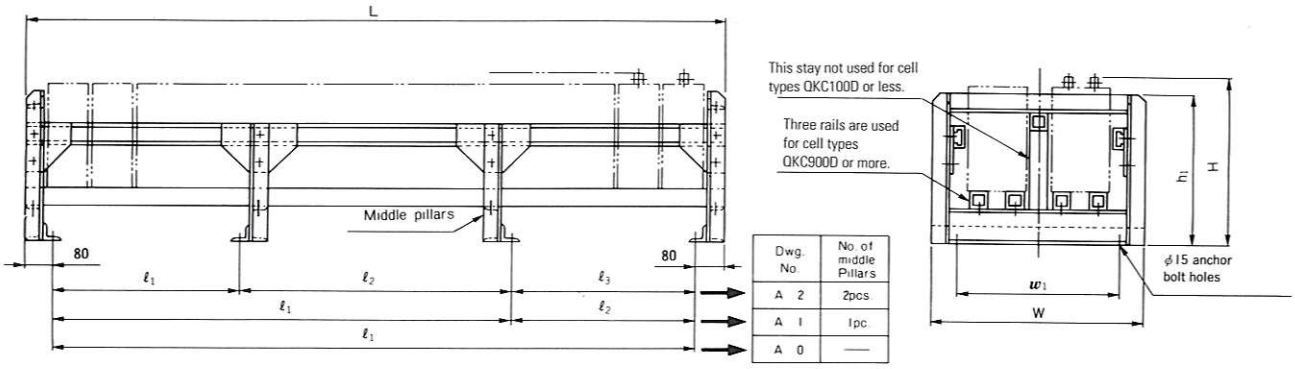

Dwg. No.	No. of middle Pillars
A 2	2pcs.
A 1	1pc.
A 0	—

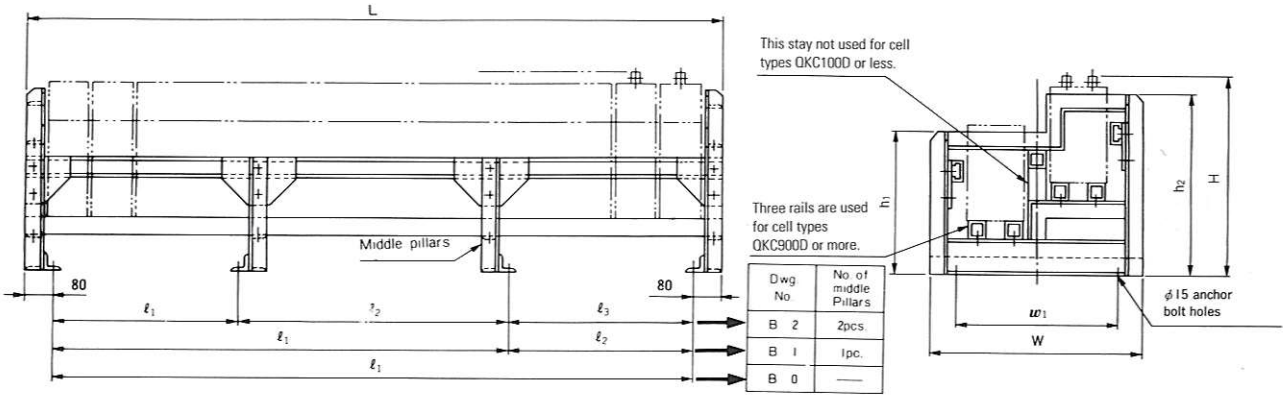

Dwg. No.	No. of middle Pillars
B 2	2pcs.
B 1	1pc.
B 0	—

2.Double Tier Construction Rack

	Cell Type	Rack Construction	Overall Dimensions Approx.(mm)							
			Height	Width	Length					
					10 cells/Row	11 cells/Row	12 cells/Row	13 cells/Row	14 cells/Row	15 cells/Row
For QKC, QSC Pocket Type	QKC30D~50D QSC20C~40C	2 Tier 2 Row 2 Tier 2 Step	1102 1266	520	630(A-0)(B-0)	682(A-0)(B-0)	734(A-0)(B-0)	786(A-0)(B-0)	838(A-0)(B-0)	890(A-0)(B-0)
	QKC60D~80D QSC50C~60C	2 Tier 2 Row 2 Tier 2 Step	1102 1266	520	865(A-0)(B-0)	941(A-0)(B-0)	1016(A-0)(B-0)	1092(A-0)(B-0)	1167(A-0)(B-0)	1243(A-0)(B-0)
	QKC100D QSC80C	2 Tier 2 Row 2 Tier 2 Step	1102 1266	524	1155(A-0)(B-0)	1260(A-0)(B-0)	1365(A-0)(B-0)	1470(A-0)(B-0)	1575(A-0)(B-0)	1680(A-0)(B-0)
	QKC120D~200D QSC100C~150C	2 Tier 2 Row 2 Tier 2 Step	1280 1521	570	1355(A-1)(B-1)	1480(A-1)(B-1)	1605(A-1)(B-1)	1730(A-1)(B-1)	1855(A-1)(B-1)	1980(A-1)(B-1)
	QKC250D~350D QSC200C~300C	2 Tier 2 Row 2 Tier 2 Step	1275 1516	620	1855(A-1)(B-1)	2030(A-1)(B-1)	2205(A-2)(B-2)	2380(A-2)(B-2)	2555(A-2)(B-2)	2730(A-2)(B-2)
	QKC400D~500D QSC350C~450C	2 Tier 2 Row 2 Tier 2 Step	1280 1526	850	1905(A-1)(B-1)	2080(A-1)(B-1)	2255(A-2)(B-2)	—	—	—
	QKC600D~800D QSC500C~600C	2 Tier 2 Row 2 Tier 2 Step	1280 1526	1060	1905(A-1)(B-1)	2080(A-1)(B-1)	2255(A-2)(B-2)	—	—	—
	QKC900D~1000D QSC700C~900C	2 Tier 2 Row	1280 1526	1310	1905(A-1)	2080(A-1)	2255(A-2)	—	—	—
For QFD, QFG, Sintered Plate Type	QFD20A~80B QFG20~60	2 Tier 2 Row 2 Tier 2 Step	1102 1266	520	675(A-0)(B-0)	732(A-0)(B-0)	789(A-0)(B-0)	846(A-0)(B-0)	903(A-0)(B-0)	960(A-0)(B-0)
	QFD100A~120B QFG80~100	2 Tier 2 Row 2 Tier 2 Step	1102 1266	520	910(A-0)(B-0)	991(A-0)(B-0)	1071(A-0)(B-0)	1152(A-0)(B-0)	1232(A-0)(B-0)	1313(A-0)(B-0)
	QFD150A	2 Tier 2 Row 2 Tier 2 Step	1102 1266	524	1155(A-0)(B-0)	1260(A-0)(B-0)	1365(A-0)(B-0)	1470(A-0)(B-0)	1575(A-0)(B-0)	1680(A-0)(B-0)
	QFD200A~250A QFG120~200	2 Tier 2 Row 2 Tier 2 Step	1270 1516	570	1355(A-1)(B-1)	1480(A-1)(B-1)	1605(A-1)(B-1)	1730(A-1)(B-1)	1855(A-1)(B-1)	1980(A-1)(B-1)
	QFD300A~450B QFG250~350	2 Tier 2 Row 2 Tier 2 Step	1270 1516	620	1855(A-1)(B-1)	2030(A-1)(B-1)	2205(A-2)(B-2)	2380(A-2)(B-2)	2555(A-2)(B-2)	2730(A-2)(B-2)
	QFD500A QFG400A~500A	2 Tier 2 Row 2 Tier 2 Step	1280 1526	850	1905(A-1)(B-1)	2080(A-1)(B-1)	2255(A-2)(B-2)	—	—	—
	QFD600A~900B QFG600A~700A	2 Tier 2 Row 2 Tier 2 Step	1280 1526	1060	1905(A-1)(B-1)	2080(A-1)(B-1)	2255(A-2)(B-2)	—	—	—
	QFD1000A~1200A QFG800A~1000A	2 Tier 2 Row	1280	1310	1905(A-1)	2080(A-1)	2255(A-2)	—	—	—

Note: 1. Standard Steel Rack, delivered disassembled. Specil design available on request.
2. ( ) show style of rack in figure. Dwg No.

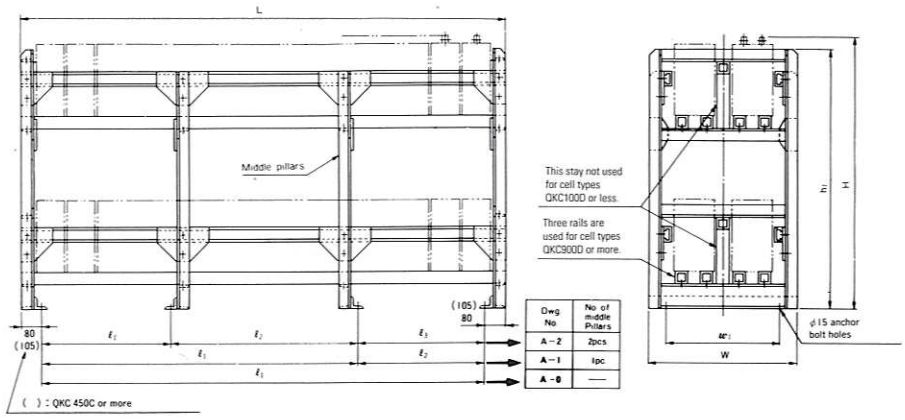

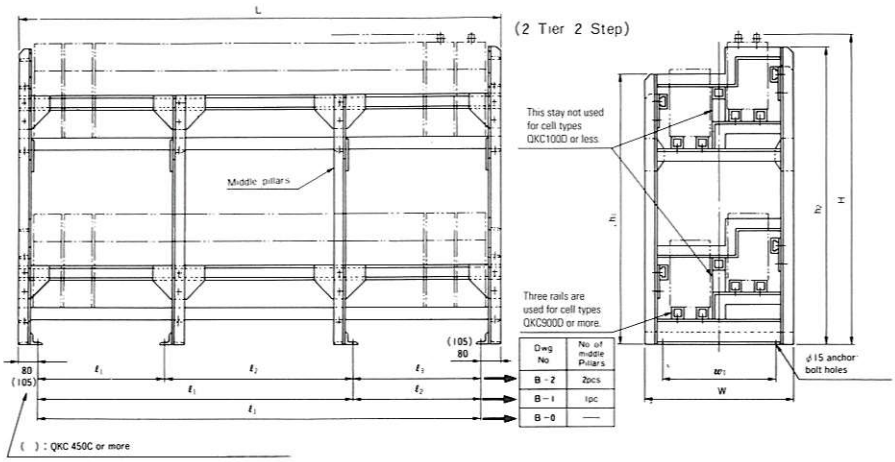

YUASA···CLEAN ENERGY FOR THE WORLD

● Specifications subject to change without prior notice.

YUASA CORPORATION

NT Bild., 47-1, Oh-i 1-Chome,
Shinagawa-ku, Tokyo 140-8514, Japan
Tel. +81 3 5742 7822
Fax +81 3 5742 7842

Distributed by :

Cat. No.	B-23(k)

0306-20(K) Printed in Japan